POWER PUMPS

SECTION INDEX

Proper Size & Selection..... 44 - 45

G1 Series Electric..... 46 - 47

20 Series Electric..... 48 - 49

G3 Series Electric..... 50 - 51

G4 Series Electric..... 52 - 53

G5 Series Electric..... 54 - 55

50 Series Electric..... 56 - 57

60 Series Electric..... 58 - 59

G5 Series Air..... 60 - 61

G4 Series Gas..... 62 - 63

50 Series Gas..... 64 - 65

G Series Power Pump Accessory Kits..... 66 - 67

Hydraulic Foot Pumps - Air ..... 68 - 69

INTRODUCTION

POWER PUMPS G SERIES

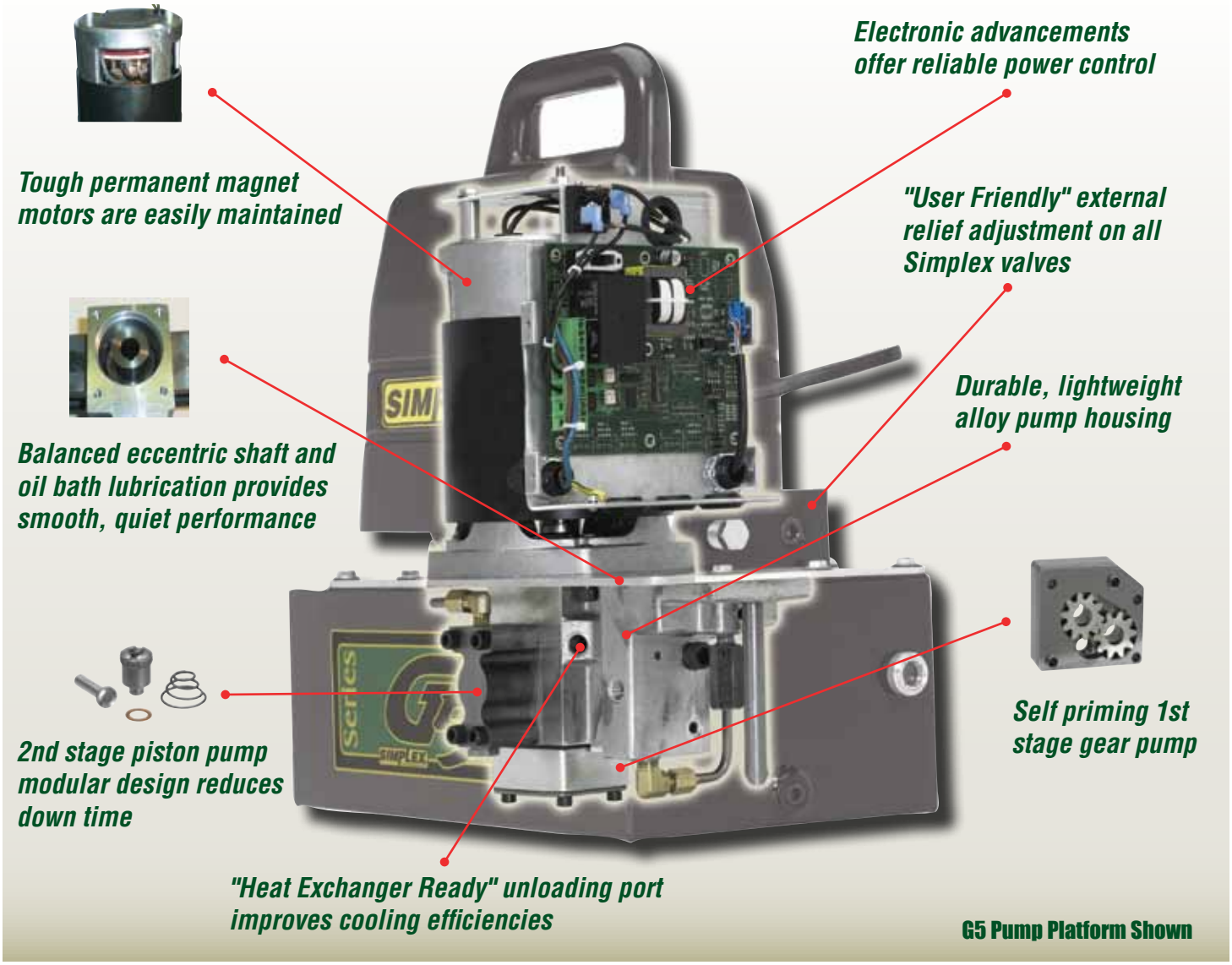

G5 Pump Platform Shown

SIMPLEX POWER PUMP PRODUCT LINE OVERVIEW

✓ **Wide Variety**
Simplex offers a large selection of pump platforms, valve styles, reservoir sizes, accessories & controls to meet your everyday needs.

✓ **Maximum Flexibility**
External adjustable pressure relief valves for variable pressure settings, plus many interchangeable control valves and reservoirs for a wide range of applications. **Dual Voltage & Dual Hertz** electric motors for applications requiring alternate power sources.

✓ **Built for Long Life & Continuous Duty**
Unified chassis provides high strength, **fewer potential leak points** and solid construction for severe duty.

✓ **High Performance / Fast Cycle Times**
Crossover pressure up to 2,000 psi. Provides high, first stage flows well into the work cycle. This extra power provides higher speeds in **Prestressing, Bending, Crimping, Compressing & Post-Tensioning applications.**

✓ **Cool Running & Dependable Performance**
High first stage performance is achieved through field proven **Gear Pump** technology. In addition to gear pumps, an unloading valve passes **full power** to the second stage once crossover pressure is reached. No power is lost and less heat is generated.

✓ **Quiet Operation**
Low motor RPM, **internally lubricated bearings,** and close coupled motor mounting make these pumps among the quietest on the market. (Approximately 80dBA at 10,000 psi.)

G1 POWER PUMPS
19 cu.in. / min. @ 10,000 psi

An intermittent 1/2 hp power pump that is best suited to power small to medium size tools or cylinders. It's very lightweight, portable and works well for crimping, cutting, pressing, punching and bending applications.

20 SERIES POWER PUMPS
20 cu.in. / min. @ 10,000 psi

A 1/2 hp continuous duty power pump that is best suited to power small to medium tools and cylinders. Ideal for systems that require high performance, lightweight and portable.

G3 POWER PUMPS
46 cu.in. / min. @ 10,000 psi

A 1 1/8 hp continuous duty power pump that is best suited to power small to medium tools and cylinders. Ideal for systems that require high performance, large oil capacities with lightweight portability.

G4 POWER PUMPS
55 cu.in. / min. @ 10,000 psi

Continuous duty 1 1/2 hp electric and 4 hp gasoline pumps are best suited for medium size tools and cylinders. It's a perfect choice for clamping, holding, positioning and lowering and lifting applications due to its reservoir sizes and valve options.

G5 POWER PUMPS
55 cu.in. / min. @ 10,000 psi

Continuous duty 1 1/2 hp electric and 3 hp air power pumps are perfect for medium size tools and cylinders on construction sites, ship and rail yards and other field applications. It's the perfect choice for production and lifting applications due to its reservoir sizes and valve options.

50 SERIES POWER PUMPS
110 cu.in. / min. @ 10,000 psi

Continuous duty 3 hp electric and 5.5 hp gasoline pumps are ideal for medium to large size tools and cylinders. The high flow rate runs multiple cylinders for heavy lifting, high tonnage and large positioning jobs and applications effectively.

60 SERIES POWER PUMPS
175 cu.in. / min. @ 10,000 psi

A continuous duty 5 hp pump ideal for large size tools and cylinders. The high flow rate runs multiple cylinders for heavy lifting, high tonnage and large positioning jobs and applications effectively.

COMPACT AIR FOOT PUMPS
6 or 10 cu.in. / min. @ 10,000 psi

An intermittent portable foot controlled pump best suited for pressing, production and shop tool applications. Runs effectively on 10CFM @ 60-150 PSI.

BASIC VALVE CONFIGURATIONS FOR PUMPS							
Pump Application	*Valve Type*	*Valve Function*			*Works With Cylinder Type*		
		Advance	*Hold*	*Retract*	*Single-Acting Load RTN*	*Single-Acting Spring RTN*	*Double-Acting*
Dump pumps are ideal for crimping, pressing or cutting applications. Switching motor "on" builds pressure, switching motor "off" dumps pressure.	Dump Valve	●	----	●	●	●	----
Manual valve pumps are ideal for general applications. Directional control is accomplished by manually shifting a control valve.	2 Way	●	●	●	●	●	----
	3 Way	●	●	●	●	●	----
	4 Way	●	●	●	----	----	●
Solenoid valve pumps are ideal for production/automation applications. Directional control is accomplished via solenoid w/ pendant.	2 Way	●	----	●	----	●	----
	3 Way	●	●	●	●	●	----
	4 Way	●	●	●	----	----	●

Simplex pumps are the world's only 10,000 psi pumps to offer a new standard in pump construction and reliability. Close coupled motor and the one piece chassis combine to offer a rigid unit with minimal flex and wear characteristics.

The chassis, field proven gear pumps, replaceable piston bores and ball seats, higher crossovers, and quality motors are just a few of the extras incorporated in all Simplex pumps.

Use the speed chart (right) and select the right size pump to obtain the cylinder speed you desire.

For multiple cylinder system speeds, divide the inches per minute by number of cylinders in the system.

Cylinder Capacity (Tons)	Inches Per Minute						
		G1 Series	20 Series	G3 Series	G4/G5 Series	50/60 Series	
10	Loaded	9	9	9	24	45	76
	Unloaded	104	169	169	169	200	290
20/25	Loaded	4	4	4	10	20	33
	Unloaded	50	75	75	75	132	132
30	Loaded	3	3	3	8 1/2	16	26
	Unloaded	39	60	60	60	104	104
50/55	Loaded	2	2	2	5	9	15
	Unloaded	23	35	35	35	61	61
60/75	Loaded	1 1/2	1 1/2	1 1/2	3 1/2	6	10
	Unloaded	16	24	24	24	43	43
100	Loaded	1	1	1	3	5	8 1/2
	Unloaded	13	19	19	19	34	34
150	Loaded	1/2	1/2	1/2	1 3/4	3	5
	Unloaded	7	11	11	11	20	20
200	Loaded	3/8	3/8	3/8	1	2	4
	Unloaded	5	8	8	8	15	15

$$\frac{\text{Inches Per Minute}}{60} = \text{Cylinder Speed In Seconds}$$

POWER PUMPS

G1 SERIES ELECTRIC

With its mobility and power, the G1 power pump with a low profile locknut cylinder was the perfect choice for adjusting loaded shelving racks in this warehouse.

G1 ELECTRIC

G1131 Shown
See table for additional models

SIMPLEX ADVANTAGES

- ✔ *Powered by a 115V - 60HZ, 1/2 hp universal motor (14,640 rpm); low startup voltage, draws 10 amps at full load (230V models available).*
- ✔ *Equipped with a 15' remote power controlled pendant.*
- ✔ *Two-speed pump operation provides fast tool performance; 19 cubic inches / minute @ 10,000 PSI.*
- ✔ *Precision designed valve offers reliability and secure load holding; external adjustable relief standard on all models.*
- ✔ *Reservoirs available in 1 gallon; steel or plastic designs.*
- ✔ *Ideal for use with smaller hydraulic cylinders or tools.*
- ✔ *Compact, lightweight design, starting at 30 lbs.*

SITE GAUGE
Metal reservoir site gauge for easy viewing of oil level.

HOSES
Large selection of standard, heavy duty and thermo plastic hydraulic hoses to meet your requirements and safety factor. *- Pg. 82-83*

MANIFOLDS
Simplex manifolds are the ideal solution in obtaining precise control when operating multiple cylinders. *- Pg. 77*

Advisory

Please refer to pages 4 & 5 for a complete list of safety tips and recommendations to ensure that your Simplex equipment will perform to its full potential.

Performance Chart

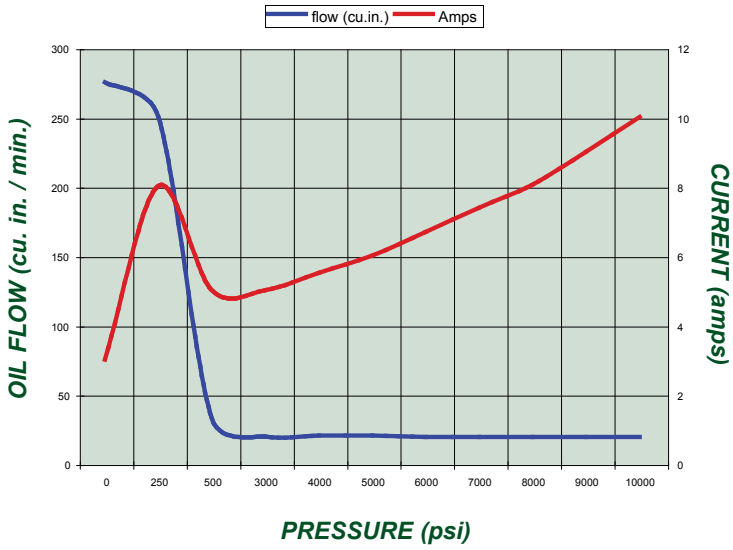

POWER PUMPS

G1 SERIES ELECTRIC

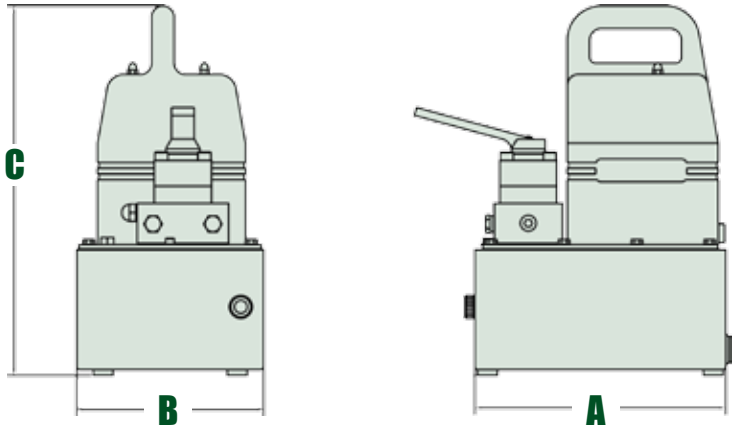

Model Shown
G1121

Usable Oil Capacity (Gallons)	A	B	C
	(in)	(in)	(in)
1 (plastic)	10.52	8.08	15.95
1 (metal)	11.00	8.17	16.17

Product Ordering & Specifications

Model	Pressure Rating (psi)		Output Flow (cu.in. / min.)		Motor Spec.		Valve Type	Pendant Control	Reservoir Capacity	Weight (lbs)
	1st Stage	2nd Stage	1st Stage	2nd Stage	(vac)	(amps)				
G1100	400	10,000	250	19	115	10	DUMP	MOTOR	1	30
G1101	400	10,000	250	19	115	10	DUMP	MOTOR	1	32
G1121	400	10,000	250	19	115	10	2W, 2P	MOTOR	1	33
G1131	400	10,000	250	19	115	10	3W, 3P	MOTOR	1	34
G1141	400	10,000	250	19	115	10	4W, 3P	MOTOR	1	34

** For 230 VAC pump use "2" in the 3rd character of the model number. Motor specifications 0,8 kw single phase, 5 amps @ 230 VAC.*
** Motor pendant is standard on all models.*

Additional Pump Configurations

	MODEL	SELECTIONS
Class	G	Power Pump
Series	1	1/2 HP Universal Motor / 19 cu.in.
Motor Voltage	1	1 = 115 VAC Single Phase; 2 = 230 VAC Single Phase
Valve Function	3	0 = Dump; 1 = 2 Way Dump; 2 = 2 Way Manual; 3 = 3 Way Manual; 4 = 4 Way Manual; 5 = 2 Way Solenoid; 8 = Port Block
Reservoir Size	1	0 = 1 Gal. (plastic); 1 = 1 Gal. (metal)

G1 ELECTRIC

POWER PUMPS

20 SERIES ELECTRIC

The versatility and mobility of the 20 Series Pump made the repair of this bridge support simple and timesaving.

PEM2022 Shown
See table for additional models

SIMPLEX ADVANTAGES

- ✔ *Powered by a 115V - 60HZ, 1/2 hp permanent magnet motor (3,000 rpm); low startup voltage, draws 17 amps at full load (230V models available).*
- ✔ *Two-stage pump operation provides fast tool performance; 20 cubic inches / minute @ 10,000 PSI.*
- ✔ *Precision designed valve offers reliability and secure load holding; external adjustable relief standard on all models.*
- ✔ *Reservoirs available in 1 - 5 gallons; welded steel design.*
- ✔ *Ideal for use with small - mid sized hydraulic cylinders or tools.*
- ✔ *Compact, lightweight design, starting at 56 lbs.*

HOSES
Large selection of standard, heavy duty and thermo plastic hydraulic hoses to meet your requirements and safety factor. *- Pg. 82-83*

MANIFOLDS
Simplex manifolds are the ideal solution in obtaining precise control when operating multiple cylinders. *- Pg. 77*

Advisory

Please refer to pages 4 & 5 for a complete list of safety tips and recommendations to ensure that your Simplex equipment will perform to its full potential.

Performance Chart

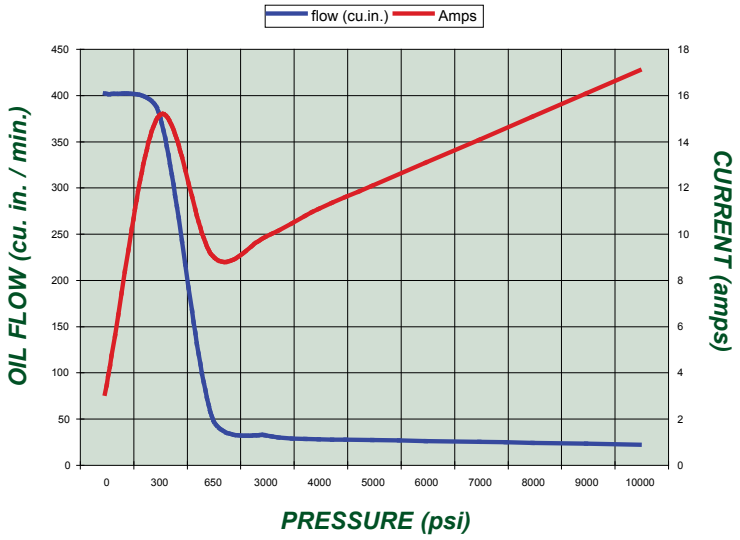

POWER PUMPS

20 SERIES ELECTRIC

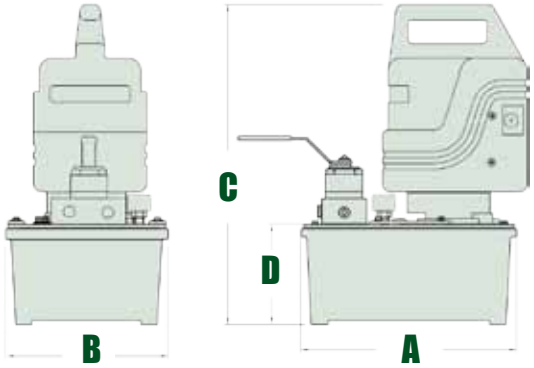

Model Shown
PEM2022

Usable Reservoir Capacity Gallons	Usable Oil Capacity	A (in)	B (in)	C (in)	D (in)
1 (metal)	230	11 5/16	7 7/8	18 9/16	5 3/16
2 (metal)	400	12 1/4	12 1/4	19 1/32	6
5 (metal)	1,150	25 3/32	12 1/4	18 9/16	8

Product Ordering & Specifications

Model	Pressure Rating (psi)		Output Flow (cu.in./min.)		Motor Spec.		Valve Type	Pendant Control	Reservoir Capacity	Weight (lbs)
	1st Stage	2nd Stage	1st Stage	2nd Stage	(vac)	(amps)				
PED2001	600	10,000	400	20	115	10	Dump	Motor	1	56
PED2002	600	10,000	400	20	115	10	Dump	Motor	2	64
PEM2021	600	10,000	400	20	115	10	2W, 2P	----	1	56
PEM2022	600	10,000	400	20	115	10	2W, 2P	----	2	64
PEM2031	600	10,000	400	20	115	10	3W, 3P	----	1	62
PEM2032	600	10,000	400	20	115	10	3W, 3P	----	2	70
PEM2052	600	10,000	400	20	115	10	3W, 3P (L)	----	2	71
PES2031	600	10,000	400	20	115	10	3W, 3P	Solenoid	1	66
PES2032	600	10,000	400	20	115	10	3W, 3P	Solenoid	2	73
PES2052	600	10,000	400	20	115	10	3W, 3P (L)	Solenoid	2	74
PEM2041	600	10,000	400	20	115	10	4W, 3P	----	1	62
PEM2042	600	10,000	400	20	115	10	4W, 3P	----	2	70
PEM2062	600	10,000	400	20	115	10	4W, 3P (L)	----	2	71
PES2041	600	10,000	400	20	115	10	4W, 3P	Solenoid	1	66
PES2042	600	10,000	400	20	115	10	4W, 3P	Solenoid	2	73
PES2062	600	10,000	400	20	115	10	4W, 3P (L)	Solenoid	2	74

** For 230 VAC pump use "A" in the 8th character of the model number.*
Motor specifications 0,8 kw single phase, 5 amps @ 230 VAC.

(L) = Lock Valve Manifold

Additional Pump Configurations

	MODEL	SELECTIONS
Class	P	Power Pump
Motor Controls	E	E = No Options; F = Foot Switch; P = Pendant Switch
Valve Style	S	S = Solenoid; M = Manual; D = Dump
Pump Series	2	1/2 HP, 50/60 Hz, Permanent Magnet Motor / 20 cu.in.
Options	1	0 = No Options; 1 = Roll Bars; 4 = Filter; 5 = Roll Bars & Filter
Valve Type	3	0 = Dump; 2 = 2 Way 2 Position; 3 = 3 Way 3 Position; 4 = 4 Way 3 Position; 5 = 3 Way Locking Style; 6 = 4 Way Locking Style
Reservoir Size	5	1 = 1 Gallon; 2 = 2 Gallon; 5 = 5 Gallon
Motor Voltage		Blank = 115 VAC Single Phase; A = 230 VAC Single Phase

POWER PUMPS

G3 SERIES ELECTRIC

A Simplex G3 power pump was used at a testing facility to pressurize manifolds for leaks. "This portable pump gave us more than enough power for our component testing and could also be used throughout the facility".

G3 ELECTRIC

G3132 Shown
See table for additional models

SIMPLEX ADVANTAGES

- ✔ *Powered by a 115V - 60Hz, 1-1/8 hp universal motor (21,000 rpm); low startup voltage, draws 16 amps at full load (230V models available).*
- ✔ *Equipped with a 15' remote power controlled pendant.*
- ✔ *High performance two-stage pump provides higher cross-over pressure for faster cycle times and equipment operation; 46 cubic inches / minute @ 10,000 PSI.*
- ✔ *Precision designed valve offers reliability and secure load holding; external adjustable relief standard on all models.*
- ✔ *Reservoirs available in 1 - 10 gallons; welded steel design.*
- ✔ *Ideal for use with small - mid sized hydraulic cylinders or tools.*
- ✔ *Heavy duty design for extended service applications.*

Performance Chart

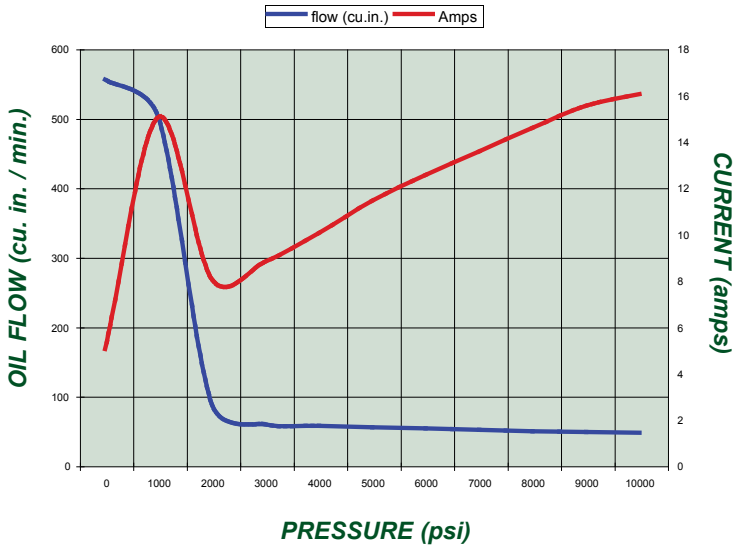

GAUGES
Improve your system visibility and safety by adding an inline hydraulic gauge to your circuit.
- Pg. 81

HOSES
Large selection of standard, heavy duty and thermo plastic hydraulic hoses to meet your requirements and safety factor. *- Pg. 82-83*

ROLL CAGE
Protect your power pump from unexpected worksite mishaps with a heavy duty roll cage. Dimensions: L - 25.13" x W - 15.13" x H - 22.13"

POWER PUMPS

G3 SERIES ELECTRIC

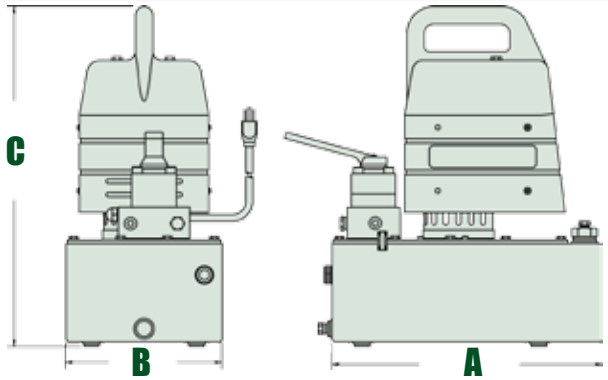

Usable Reservoir Capacity Gallons	A	B	C
	(in)	(in)	(in)
1	11.00	8.19	18.75
1.5	15.13	8.75	19
2.5	17	9.75	19
5	25.10	11.75	18.75
10	25.10	11.75	23

Model Shown
G3122

Product Ordering & Specifications

Model	Pressure Rating (psi)		Output Flow (cu.in./min.)		Motor Spec.		Valve Type	Pendant Control	Reservoir Capacity	Weight (lbs)
	1st Stage	2nd Stage	1st Stage	2nd Stage	(vac)	(amps)				
G3100	1,100	10,000	650	46	115	16	Dump	Motor	1	38
G3101	1,100	10,000	650	46	115	16	Dump	Motor	1	45
G3102	1,100	10,000	650	46	115	16	Dump	Motor	1.5	50
G3121	1,100	10,000	650	46	115	16	2W, 2P	Motor	1	45
G3122	1,100	10,000	650	46	115	16	2W, 2P	Motor	1.5	52
G3131	1,100	10,000	650	46	115	16	3W, 3P	Motor	1	48
G3132	1,100	10,000	650	46	115	16	3W, 3P	Motor	1.5	53
G3133	1,100	10,000	650	46	115	16	3W, 3P	Motor	2.5	63
G3162	1,100	10,000	650	46	115	16	3W, 3P	Motor / Solenoid	1.5	57
G3163	1,100	10,000	650	46	115	16	3W, 3P	Motor / Solenoid	2.5	67
G3141	1,100	10,000	650	46	115	16	4W, 3P	Motor	1	48
G3142	1,100	10,000	650	46	115	16	4W, 3P	Motor	1.5	53
G3143	1,100	10,000	650	46	115	16	4W, 3P	Motor	2.5	63
G3172	1,100	10,000	650	46	115	16	4W, 3P	Motor / Solenoid	1.5	57
G3173	1,100	10,000	650	46	115	16	4W, 3P	Motor / Solenoid	2.5	67

** For 230 VAC pump use "2" in the 3rd character of the model number. Motor specifications 0,8 kw single phase, 10 amps @ 230 VAC.*

Additional Pump Configurations

	MODEL	SELECTIONS
Class	G	Power Pump
Series	3	1 1/8 HP Universal Motor / 46 cu.in.
Motor Voltage	1	1 = 115 VAC Single Phase 2 = 230 VAC Single Phase
Valve Function	3	0 = Dump 1 = 2 Way Dump 2 = 2 Way Manual 3 = 3 Way Manual 4 = 4 Way Manual 5 = 2 Way Solenoid 6 = 3 Way Solenoid 7 = 4 Way Solenoid 8 = Port Block
Reservoir Size	2	1 = 1 Gal. (metal) 2 = 1.5 Gal. (metal) 3 = 2.5 Gal. (metal) 5 = 5 Gal. (metal) 6 = 10 Gal. (metal)
*Factory Installed Options**		C = Caster Wheel Kit F = Foot Switch (Motor) G = Pump Mounted Gauge L = Locking Style Manifold O = Oil Filter P = Pressure Switch R = Roll Cage S = Foot Switch (Valve)

G3 ELECTRIC

** If pump model consists of more than 3 options, contact factory. * Motor pendant is standard on all models.*

POWER PUMPS

G4 SERIES ELECTRIC

The Simplex G4 power pump along with the S3000A spreader was used to pry apart the rusted doors on this steel shipping container.

G4 ELECTRIC

G4173M Shown
See table for additional models

SIMPLEX ADVANTAGES

- ✔ *Powered by a 115V - 60Hz, 1-1/2 hp induction motor (1,725 rpm); low startup voltage, draws 16 amps at full load (230V models available).*
- ✔ *High performance two-stage pump provides higher cross-over pressure for faster cycle times and equipment operation; 55 cubic inches / minute @ 10,000 PSI.*
- ✔ *Precision designed valve offers reliability and secure load holding; external adjustable relief standard on all models.*
- ✔ *Reservoirs available in 1.5 - 20 gallons; welded steel design.*
- ✔ *Ideal for use with mid sized hydraulic cylinders or tools.*
- ✔ *Quiet operation, plus heavy duty design for extended applications.*

Performance Chart

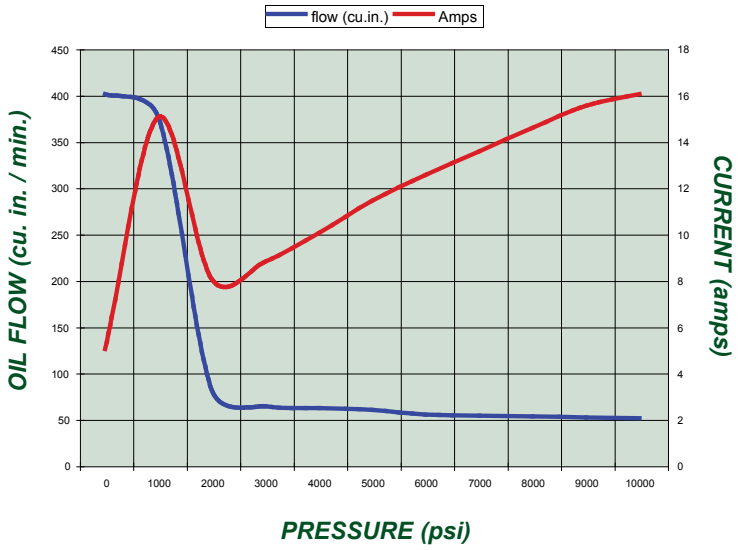

COUPLERS
High flow quick disconnect couplers provide a quick change to a variety of pumps.
- Pg. 78-79

HOSES
Large selection of standard, heavy duty and thermo plastic hydraulic hoses to meet your requirements and safety factor. *- Pg. 82-83*

ROLL CAGE
Protect your power pump from unexpected worksite mishaps with a heavy duty roll cage. Dimensions: L - 25.13" x W - 15.13" x H - 22.13"

CONTROL VALVES
Simplex offers 2, 3 and 4 way valves to operate single and double acting cylinders and tools.
- Pg. 74-75

POWER PUMPS

G4 SERIES ELECTRIC

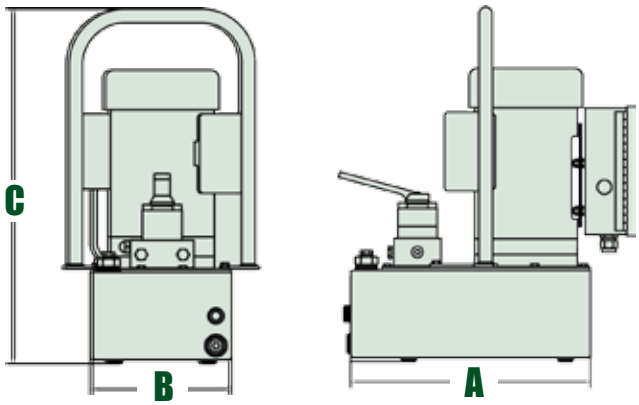

Usable Reservoir Capacity Gallons	A (in)	B (in)	C (in)
1.5	15.13	8.75	22.34
2.5	17	9.75	22.34
5	25.10	11.75	21
10	25.10	11.75	25.25
20	28	19.6	25.25

Model Shown
G4143O

Product Ordering & Specifications

Model	Pressure Rating (psi)		Output Flow (cu.in./min.)		Motor Spec.		Valve Type	Pendant Control	Reservoir Capacity	Weight (lbs)
	1st Stage	2nd Stage	1st Stage	2nd Stage	(vac)	(amps)				
G4102	1,100	10,000	400	55	115	16	Dump	Motor	1.5	38
G4103	1,100	10,000	400	55	115	16	Dump	Motor	2.5	45
G4122	1,100	10,000	400	55	115	16	2W, 2P	Optional Motor	1.5	52
G4132	1,100	10,000	400	55	115	16	3W, 3P	Optional Motor	1.5	53
G4133	1,100	10,000	400	55	115	16	3W, 3P	Optional Motor	2.5	63
G4162	1,100	10,000	400	55	115	16	3W, 3P	Motor / Solenoid	1.5	57
G4163	1,100	10,000	400	55	115	16	3W, 3P	Motor / Solenoid	2.5	67
G4142	1,100	10,000	400	55	115	16	4W, 3P	Optional Motor	1.5	53
G4143	1,100	10,000	400	55	115	16	4W, 3P	Optional Motor	2.5	63
G4172	1,100	10,000	400	55	115	16	4W, 3P	Motor / Solenoid	1.5	57
G4173	1,100	10,000	400	55	115	16	4W, 3P	Motor / Solenoid	2.5	67

** For 230 VAC pump use "2" in the 3rd character of the model number. Motor specifications 0,8 kw single phase, 10 amps @ 230 VAC.*

Additional Pump Configurations

	MODEL	SELECTIONS		
Class	G	Power Pump		
Series	4	1 1/2 HP Induction Motor / 55 cu.in.		
Motor Voltage	1	1 = 115 VAC Single Phase	2 = 230 VAC Single Phase	
Valve Function	3	0 = Dump 1 = 2 Way Dump 2 = 2 Way Manual	3 = 3 Way Manual 4 = 4 Way Manual 5 = 2 Way Solenoid	6 = 3 Way Solenoid 7 = 4 Way Solenoid 8 = Port Block
Reservoir Size	2	2 = 1.5 Gal. (metal) 3 = 2.5 Gal. (metal)	5 = 5 Gal. (metal) 6 = 10 Gal. (metal)	7 = 20 Gal. (metal)
*Factory Installed Options**		C = Caster Wheel Kit F = Foot Switch (Motor) G = Pump Mounted Gauge	L = Locking Style Manifold M = Motor Pendant O = Oil Filter	P = Pressure Switch R = Roll Cage S = Foot Switch (Valve)

G4 ELECTRIC

** If pump model consists of more than 3 options, contact factory.*

POWER PUMPS

G5 SERIES ELECTRIC

The G5 power pump coupled with a 50 ton Simplex cylinder are used daily to position bearings in the assembly processing section of the plant.

G5 ELECTRIC

G5132G Shown
See table for additional models

SIMPLEX ADVANTAGES

- ✔ *Powered by a 115V - 60Hz, 1-1/2 hp permanent magnet motor (3,000 rpm); low startup voltage, draws 18 amps at full load (230V models available).*
- ✔ *Equipped with a 15' remote power controlled pendant.*
- ✔ *High performance two-stage pump provides higher cross-over pressure for faster cycle times and equipment operation; 55 cubic inches / minute @ 10,000 PSI. Optional 3 stage for progressive force.*
- ✔ *Precision designed valve offers reliability and secure load holding; external adjustable relief standard on all models.*
- ✔ *Reservoirs available in 1.5 - 20 gallons; welded steel design.*
- ✔ *Ideal for use with mid to large sized hydraulic cylinders or tools.*
- ✔ *Best weight-to-performance ratio in its class, starting at 64 lbs.*

Performance Chart

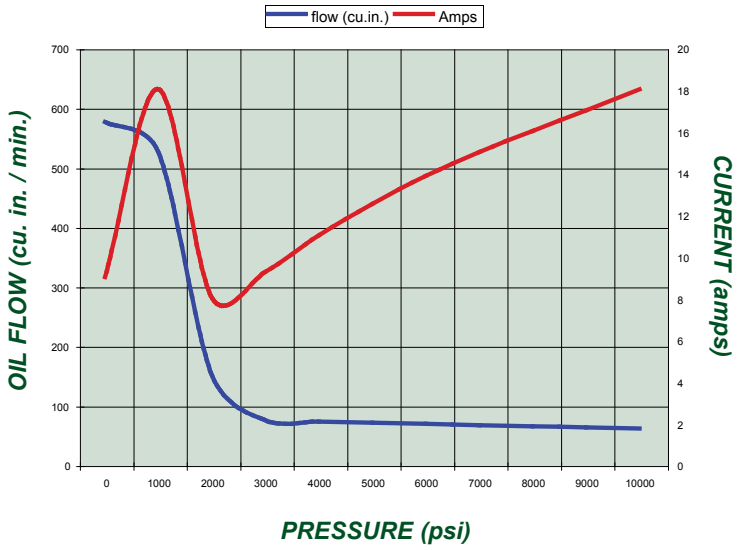

SITE GAUGE
Metal reservoir site gauge for easy viewing of oil level.

MANIFOLDS
Simplex manifolds are the ideal solution in obtaining precise control when operating multiple cylinders.
- Pg. 77

HOSES
Large selection of standard, heavy duty and thermo plastic hydraulic hoses to meet your requirements and safety factor.
- Pg. 82-83

POWER PUMPS

G5 SERIES ELECTRIC

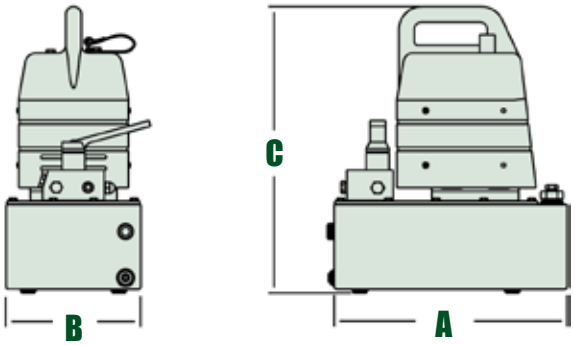

Usable Reservoir Capacity Gallons	A	B	C
	(in)	(in)	(in)
1.5	15.13	8.75	18.59
2.5	17	9.75	18.59
5	25.10	11.75	18.59
10	25.10	11.75	22.84
20	28	19.60	22.84

Model Shown
G5175

Product Ordering & Specifications

Model	Pressure Rating (psi)		Output Flow (cu.in./min.)		Motor Spec.		Valve Type	Pendant Control	Reservoir Capacity	Weight (lbs)
	1st Stage	2nd Stage	1st Stage	2nd Stage	(vac)	(amps)				
G5102	1,100	10,000	700	55	115	18	Dump	Motor	1.5	64
G5103	1,100	10,000	700	55	115	18	Dump	Motor	2.5	74
G5122	1,100	10,000	700	55	115	18	2W, 2P	Motor	1.5	64
G5123	1,100	10,000	700	55	115	18	2W, 2P	Motor	2.5	74
G5132	1,100	10,000	700	55	115	18	3W, 3P	Motor	1.5	67
G5133	1,100	10,000	700	55	115	18	3W, 3P	Motor	2.5	77
G5135	1,100	10,000	700	55	115	18	3W, 3P	Motor	5	115
G5162	1,100	10,000	700	55	115	18	3W, 3P	Motor / Solenoid	1.5	71
G5163	1,100	10,000	700	55	115	18	3W, 3P	Motor / Solenoid	2.5	81
G5165	1,100	10,000	700	55	115	18	3W, 3P	Motor / Solenoid	5	119
G5142	1,100	10,000	700	55	115	18	4W, 3P	Motor	1.5	67
G5143	1,100	10,000	700	55	115	18	4W, 3P	Motor	2.5	77
G5145	1,100	10,000	700	55	115	18	4W, 3P	Motor	5	115
G5172	1,100	10,000	700	55	115	18	4W, 3P	Motor / Solenoid	1.5	71
G5173	1,100	10,000	700	55	115	18	4W, 3P	Motor / Solenoid	2.5	81
G5175	1,100	10,000	700	55	115	18	4W, 3P	Motor / Solenoid	5	119

** For 230 VAC pump use "2" in the 3rd character of the model number. Motor specifications 0,8 kw single phase, 10 amps @ 230 VAC.*

Additional Pump Configurations

	MODEL	SELECTIONS
Class	G	Power Pump
Series	5	1 1/2 HP Permanent Magnet Motor / 55 cu.in.
Motor Voltage	1	1 = 115 VAC Single Phase 2 = 230 VAC Single Phase
Valve Function	3	0 = Dump 1 = 2 Way Dump 2 = 2 Way Manual 3 = 3 Way Manual 4 = 4 Way Manual 5 = 2 Way Solenoid 6 = 3 Way Solenoid 7 = 4 Way Solenoid 8 = Port Block
Reservoir Size	2	2 = 1.5 Gal. (metal) 3 = 2.5 Gal. (metal) 5 = 5 Gal. (metal) 6 = 10 Gal. (metal) 7 = 20 Gal. (metal)
*Factory Installed Options**		B = 3 Stage Pump C = Caster Wheel Kit F = Foot Switch (Motor) G = Pump Mounted Gauge H = Heat Exchanger L = Locking Style Manifold O = Oil Filter P = Pressure Switch R = Roll Cage S = Foot Switch (Valve)

G5 ELECTRIC

** If pump model consists of more than 3 options, contact factory. * Motor pendant is standard on all models.*

POWER PUMPS

50 SERIES ELECTRIC

The 50 Series pump can power a variety of Simplex tools and withstands the daily wear and tear in this shipyard.

PEM5045 Shown
See table for additional models

SIMPLEX ADVANTAGES

- ✔ *Powered by a dual voltage - 3 phase, 3 hp ac motor (3,450 rpm); low startup voltage, draws 9.5 amps at full load.*
- ✔ *Starter box is equipped on all models.*
- ✔ *Two-stage pump operation provides fast tool performance; 110 cubic inches / minute @ 10,000 PSI.*
- ✔ *Precision designed valve offers reliability and secure load holding; external adjustable relief standard on all models.*
- ✔ *Reservoirs available in 5 - 40 gallons; welded steel design.*
- ✔ *Ideal for use with mid - large sized hydraulic cylinders or tools.*
- ✔ *Ideal for production and multi-cylinder lift systems, starting at 162 lbs.*
- ✔ *Quiet running (80dBA).*

Performance Chart

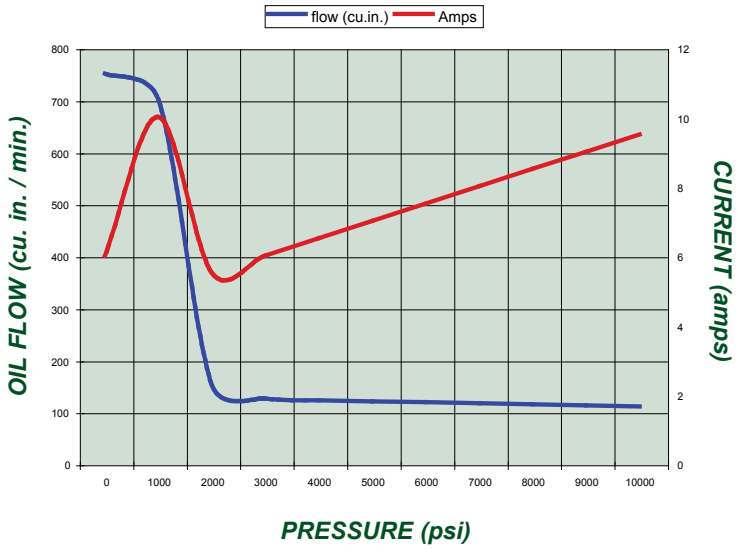

GAUGES
Improve your system visibility and safety by adding an inline hydraulic gauge to your circuit.
- Pg. 81

MANIFOLDS
Simplex manifolds are the ideal solution in obtaining precise control when operating multiple cylinders.
- Pg. 77

COUPLERS
High flow quick disconnect couplers provide a quick change to a variety of pumps.
- Pg. 78-79

POWER PUMPS

50 SERIES ELECTRIC

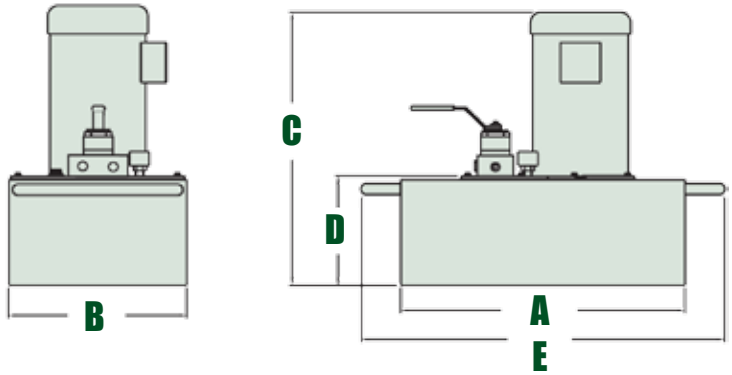

Model Shown
PEM5045

Usable Reservoir Capacity (Gal.)	Usable Oil Capacity (cu.in.)	A (in)	B (in)	C (in)	D (in)	E (in)
5	1,150	19 5/8	12 5/16	18 5/16	8	25 3/32
10	2,300	19 5/8	12 5/16	23 3/4	12 1/2	25 3/32
20	4,600	19 5/8	23 1/2	23 3/4	12 1/2	25 3/32

Product Ordering & Specifications

Model	Pressure Rating (psi)		Output Flow (cu.in./min.)		Motor Spec.		Valve Type	Pendant Control	Reservoir Capacity	Weight (lbs)
	1st Stage	2nd Stage	1st Stage	2nd Stage	(vac)	(amps)				
PEM5035	1,500	10,000	650	110	230	10	3W, 3P	----	5	162
PEM5036	1,500	10,000	650	110	230	10	3W, 3P	----	10	217
PEM5056	1,500	10,000	650	110	230	10	3W, 3P (L)	----	10	218
PES5035	1,500	10,000	650	110	230	10	3W, 3P	Solenoid	5	165
PES5036	1,500	10,000	650	110	230	10	3W, 3P	Solenoid	10	220
PES5056	1,500	10,000	650	110	230	10	3W, 3P (L)	Solenoid	10	221
PEM5045	1,500	10,000	650	110	230	10	4W, 3P	----	5	162
PEM5046	1,500	10,000	650	110	230	10	4W, 3P	----	10	217
PEM5066	1,500	10,000	650	110	230	10	4W, 3P (L)	----	10	218
PES5045	1,500	10,000	650	110	230	10	4W, 3P	Solenoid	5	165
PES5046	1,500	10,000	650	110	230	10	4W, 3P	Solenoid	10	220
PES5066	1,500	10,000	650	110	230	10	4W, 3P (L)	Solenoid	10	221

(L) = Lock Valve Manifold

Additional Pump Configurations

	MODEL	SELECTIONS
Class	P	Power Pump
Motor Controls	E	E = No Options; F = Foot Switch; P = Pendant Switch
Valve Style	S	S = Solenoid; M = Manual
Pump Series	5	3 HP, 3 Phase Motor with Starter Box
Options	2	0 = No Options; 2 = Heat Exchanger & Filter; 4 = Filter Only
Valve Type	3	3 = 3 Way 3 Position; 4 = 4 Way 3 Position; 5 = 3 Way Locking Style; 6 = 4 Way Locking Style
Reservoir Size	5	5 = 5 Gallon; 6 = 10 Gallon; 7 = 20 Gallon; 8 = 40 Gallon
Motor Voltage		Blank = 230 VAC 3 Phase; A = 460 VAC 3 Phase; B = 380 VAC, 3 Phase; C = 515 VAC, 3 Phase

POWER PUMPS

60 SERIES ELECTRIC

When it comes to large projects, this Simplex 60 Series pump provides the highest available flows and industrial grade quality to power numerous high tonnage lifts.

PES6045 Shown
See table for additional models

SIMPLEX ADVANTAGES

- ✔ *Powered by a dual voltage - 3 phase, 5 hp ac motor (3,450 rpm); low startup voltage, draws 15 amps at full load.*
- ✔ *Starter box is equipped on all models.*
- ✔ *Two-stage pump operation provides fast tool performance; 175 cubic inches / minute @ 10,000 PSI.*
- ✔ *Precision designed valve offers reliability and secure load holding; external adjustable relief standard on all models.*
- ✔ *Reservoirs available in 5 - 40 gallons; welded steel design.*
- ✔ *Ideal for use with mid - large sized hydraulic cylinders or tools.*
- ✔ *Ideal for production and multi-cylinder lift systems, starting at 162 lbs.*
- ✔ *Quiet running (80dBA).*

Performance Chart

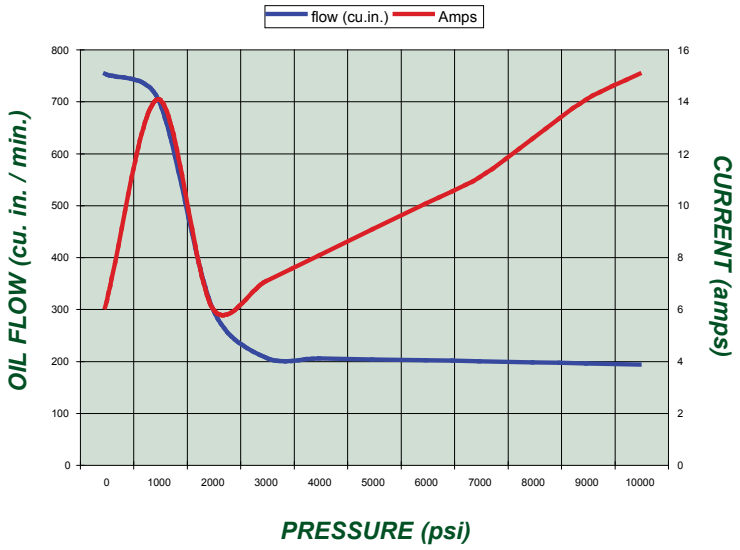

START / STOP SWITCH TERMINAL
Durable plastic, industrial rated on / off switch located on the right side of the control box ensures safety in the harshest work environments.

GAUGES
Improve your system visibility and safety by adding an inline hydraulic gauge to your circuit.
- Pg. 81

MANIFOLDS
Simplex manifolds are the ideal solution in obtaining precise control when operating multiple cylinders.
- Pg. 77

HOSES
Large selection of standard, heavy duty and thermo plastic hydraulic hoses to meet your requirements and safety factor. *- Pg. 82-83*

POWER PUMPS

60 SERIES ELECTRIC

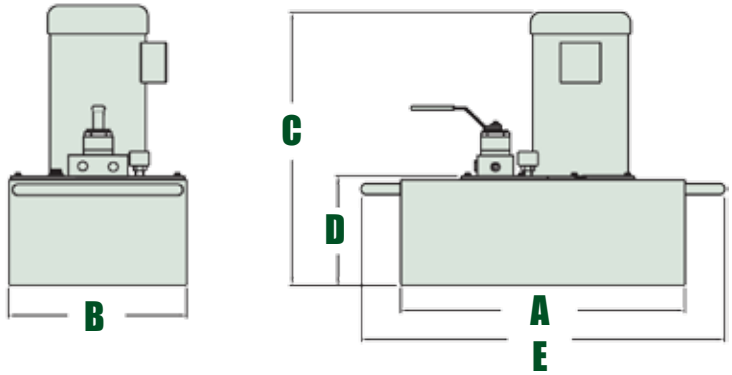

Model Shown
PES6045

Usable Reservoir Capacity (Gal.)	Usable Oil Capacity (cu.in.)	A (in)	B (in)	C (in)	D (in)	E (in)
5	1,150	19 5/8	12 5/16	18 5/16	8	25 5/32
10	2,300	19 5/8	12 5/16	23 3/4	12 1/2	25 5/32
20	4,600	19 5/8	23 1/2	23 3/4	12 1/2	25 5/32

Product Ordering & Specifications

Model	Pressure Rating (psi)		Output Flow (cu.in./min.)		Motor Spec.		Valve Type	Pendant Control	Reservoir Capacity	Weight (lbs)
	1st Stage	2nd Stage	1st Stage	2nd Stage	(vac)	(amps)				
PEM6035	2,000	10,000	650	175	230	15	3W, 3P	----	5	162
PEM6036	2,000	10,000	650	175	230	15	3W, 3P	----	10	217
PES6035	2,000	10,000	650	175	230	15	3W, 3P	Solenoid	5	165
PES6036	2,000	10,000	650	175	230	15	3W, 3P	Solenoid	10	220
PEM6045	2,000	10,000	650	175	230	15	4W, 3P	----	5	162
PEM6046	2,000	10,000	650	175	230	15	4W, 3P	----	10	217
PES6045	2,000	10,000	650	175	230	15	4W, 3P	Solenoid	5	165
PES6046	2,000	10,000	650	175	230	15	4W, 3P	Solenoid	10	220

Additional Pump Configurations

	MODEL	SELECTIONS
Class	P	Power Pump
Motor Controls	E	E = No Options; F = Foot Switch; P = Pendant Switch
Valve Style	S	S = Solenoid; M = Manual
Pump Series	6	5 HP, Multi-Volt, 3 Phase motor with Starter Box / 175 cu.in.
Options	2	0 = No Options; 4 = Filter Only; 2 = Heat Exchanger & Filter
Valve Type	3	3 = 3 Way 3 Position; 5 = 3 Way Locking Style; 4 = 4 Way 3 Position; 6 = 4 Way Locking Style
Reservoir Size	5	5 = 5 Gallon; 7 = 20 Gallon; 6 = 10 Gallon; 8 = 40 Gallon
Motor Voltage		Blank = 230 VAC 3 Phase; B = 380 VAC; A = 460 VAC 3 Phase; C = 515 VAC

POWER PUMPS

G5 SERIES AIR

The power and dependability of the G5 Air Power Pump is the perfect solution for any job where electric and gasoline powered tools are not suitable.

G5 AIR

G5773 Shown
See table for additional models

SIMPLEX ADVANTAGES

- ✔ *Powered by a rotary air vane, 3 hp motor (3,000 rpm).*
- ✔ *Equipped with a filter-lubricator assembly, air muffler and carry handlebar on all models.*
- ✔ *High performance two-stage pump provides higher cross-over pressure for faster cycle times and equipment operation; 55 cubic inches / minute @ 10,000 PSI. Optional 3 stage for progressive force.*
- ✔ *Precision designed valve offers reliability and secure load holding; external adjustable relief standard on all models.*
- ✔ *Reservoirs available in 1.5 - 20 gallons; welded steel design.*
- ✔ *Ideal for use with mid sized hydraulic cylinders or tools.*
- ✔ *Compact, lightweight design within its class, starting at 50 lbs.*

Performance Chart

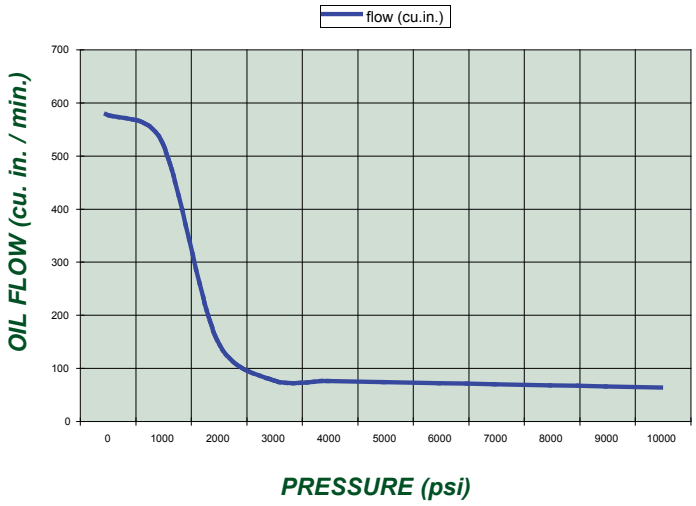

FILTER & LUBRICATOR
All models come equipped with a filter / lubricator assembly.

HOSES
Large selection of standard, heavy duty and thermo plastic hydraulic hoses to meet your requirements and safety factor. - Pg. 82-83

COUPLERS
High flow quick disconnect couplers provide a quick change to a variety of pumps.
- Pg. 78-79

ROLL CAGE
Protect your power pump from unexpected worksite mishaps with a heavy duty roll cage. Dimensions: L - 25.13" x W - 15.13" x H - 22.13"

POWER PUMPS

G5 SERIES
AIR

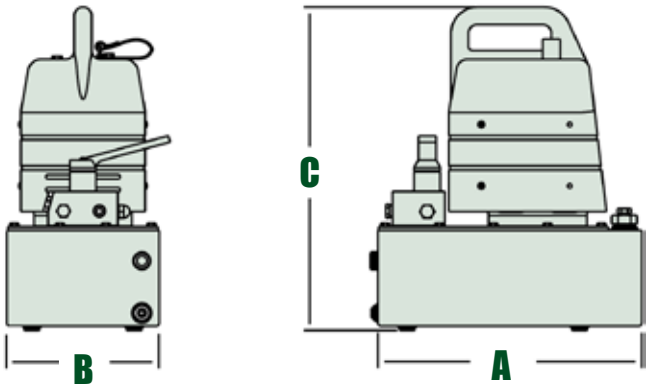

Usable Reservoir Capacity Gallons	A	B	C
	(in)	(in)	(in)
1.5	15.13	8.75	18.59
2.5	17	9.75	18.59
5	25.10	11.75	18.59
10	25.10	11.75	22.84
20	28	19.60	22.84

Model Shown
G5773

Product Ordering & Specifications

Model	Pressure Rating (psi)		Output Flow (cu.in. / min.		Motor Spec.		Valve Type	Pendant Control	Reservoir Capacity	Weight (lbs)
	1st Stage	2nd Stage	1st Stage	2nd Stage	(psi)	(cfm)				
G5732	1,100	10,000	700	55	90	50	3W, 3P	-----	1.5	50
G5735	1,100	10,000	700	55	90	50	3W, 3P	-----	5	108
G5762	1,100	10,000	700	55	90	50	3W, 3P	Solenoid	1.5	52
G5765	1,100	10,000	700	55	90	50	3W, 3P	Solenoid	5	110
G5742	1,100	10,000	700	55	90	50	4W, 3P	-----	1.5	50
G5745	1,100	10,000	700	55	90	50	4W, 3P	-----	5	108
G5772	1,100	10,000	700	55	90	50	4W, 3P	Solenoid	1.5	52
G5775	1,100	10,000	700	55	90	50	4W, 3P	Solenoid	5	110

Additional Pump Configurations

	MODEL	SELECTIONS		
Class	G	Power Pump		
Series	5	3 HP Air Motor / 55 cu.in.		
Motor Type	7	7 = Rotary Vane		
Valve Function	3	0 = Dump 1 = 2 Way Dump 2 = 2 Way Manual	3 = 3 Way Manual 4 = 4 Way Manual 5 = 2 Way Solenoid	6 = 3 Way Solenoid 7 = 4 Way Solenoid 8 = Port Block
Reservoir Size	5	2 = 1.5 Gal. (metal) 3 = 2.5 Gal. (metal)	5 = 5 Gal. (metal) 6 = 10 Gal. (metal)	7 = 20 Gal. (metal)
*Factory Installed Options**		B = 3 Stage Pump C = Caster Wheel Kit	G = Gauge (Integrated) L = Locking Style Manifold	O = Oil Filter R = Roll Cage

** If pump model consists of more than 3 options, contact factory.*

POWER PUMPS

G4 SERIES GAS

The location to repair this dock foundation needed the versatility of the G4 gas power pump. "Worksites know no boundaries; the G4 performance proved itself in the most rugged, remote areas".

G4 GAS

G4833 Shown
See table for additional models

SIMPLEX ADVANTAGES

- ✔ *Powered by a 4 hp Briggs & Stratton® gas motor.*
- ✔ *Equipped with a carry handlebar on all models.*
- ✔ *High performance two-stage pump provides higher cross-over pressure for faster cycle times and equipment operation; 50 cubic inches / minute @ 10,000 PSI.*
- ✔ *Precision designed valve offers reliability and secure load holding; external adjustable relief standard on all models.*
- ✔ *Reservoirs available in 1.5 - 20 gallons; welded steel design.*
- ✔ *Ideal for use with mid sized hydraulic cylinders or tools.*
- ✔ *Compact, self contained design, starting at 53 lbs.*

HOSES
Large selection of standard, heavy duty and thermo plastic hydraulic hoses to meet your requirements and safety factor. *- Pg. 82-83*

GAUGES
Improve your system visibility and safety by adding an inline hydraulic gauge to your circuit.
- Pg. 81

Advisory

Please refer to pages 4 & 5 for a complete list of safety tips and recommendations to ensure that your Simplex equipment will perform to its full potential.

Performance Chart

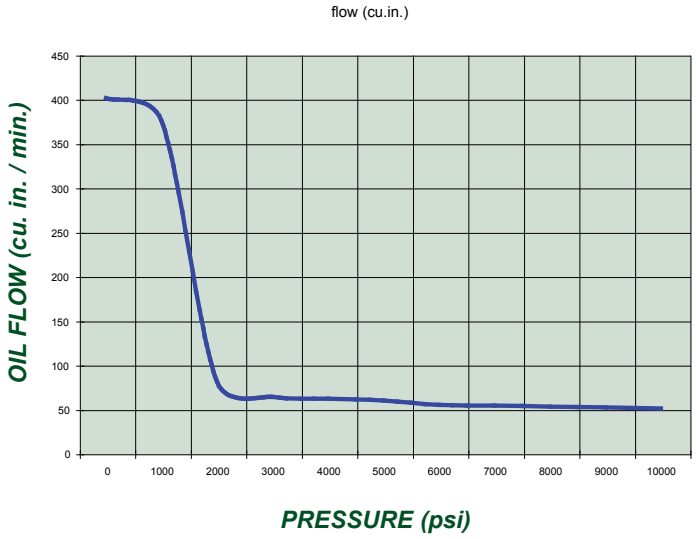

POWER PUMPS

G4 SERIES
GAS

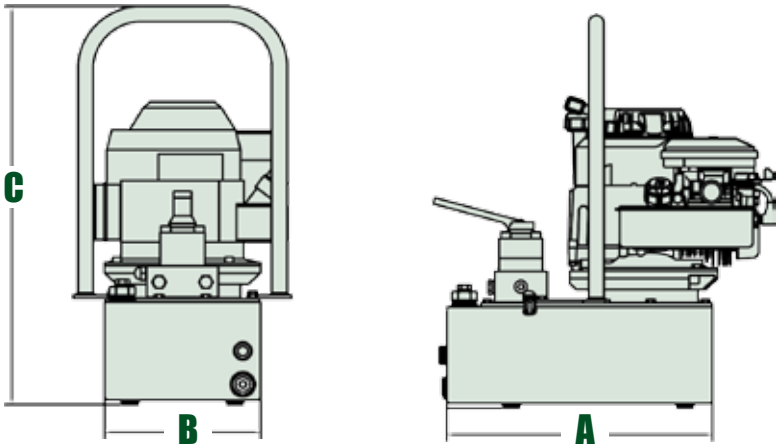

Model Shown
G4833

Usable Reservoir Capacity Gallons	A	B	C
	(in)	(in)	(in)
1.5	15.13	8.75	22.34
2.5	17	9.75	22.34
5	25.10	11.75	19.54
10	25.10	11.75	23.97
20	28	19.60	22.84

Product Ordering & Specifications

Model	Pressure Rating		Output Flow		Motor	Valve Type	Reservoir Capacity	Weight (lbs)
	1st Stage	2nd Stage	1st Stage	2nd Stage	B&S			
G4833	1,100	10,000	700	50	4 HP	3W, 3P	2.5	53
G4835	1,100	10,000	700	50	4 HP	3W, 3P	5	108
G4843	1,100	10,000	700	50	4 HP	4W, 3P	2.5	53
G4845	1,100	10,000	700	50	4 HP	4W, 3P	5	108

Additional Pump Configurations

G4 GAS

	MODEL	SELECTIONS		
Class	G	Power Pump		
Series	4	4 HP Gas Motor		
Motor Type	8	8 = 4 HP Briggs & Stratton® Gas Engine / 50 cu.in.		
Valve Function	3	0 = Dump 1 = 2 Way Dump 2 = 2 Way Manual	3 = 3 Way Manual 4 = 4 Way Manual 8 = Port Block	
Reservoir Size	5	2 = 1.5 Gal. (metal) 3 = 2.5 Gal. (metal)	5 = 5 Gal. (metal) 6 = 10 Gal. (metal)	7 = 20 Gal. (metal)
*Factory Installed Options**		C = Caster Wheel Kit G = Gauge (Integrated) L = Locking Style Manifold	O = Oil Filter R = Roll Cage	

** If pump model consists of more than 3 options, contact factory.*

POWER PUMPS

50 SERIES GAS

The Simplex 50 Series gas pump powered a 4 point lift system to raise this historic structure for relocation.

PGHM5132 Shown
See table for additional models

SIMPLEX ADVANTAGES

- ✔ *Powered by a 5.5 hp Honda® gas motor.*
- ✔ *Equipped with a roll cage on all models.*
- ✔ *High performance two-stage pump provides higher cross-over pressure for faster cycle times and equipment operation; 110 cubic inches / minute @ 10,000 PSI.*
- ✔ *Precision designed valve offers reliability and secure load holding; external adjustable relief standard on all models.*
- ✔ *Reservoirs available in 2 - 20 gallons; welded steel design.*
- ✔ *Ideal for use with mid - large sized hydraulic cylinders or tools.*
- ✔ *Compact, self contained design, starting at 68 lbs.*

MANIFOLDS
Simplex manifolds are the ideal solution in obtaining precise control when operating multiple cylinders.
- Pg. 77

COUPLERS
High flow quick disconnect couplers provide a quick change to a variety of pumps.
- Pg. 78-79

HOSES
Large selection of standard, heavy duty and thermo plastic hydraulic hoses to meet your requirements and safety factor. *- Pg. 82-83*

GAUGES
Improve your system visibility and safety by adding an inline hydraulic gauge to your circuit.
- Pg. 81

Performance Chart

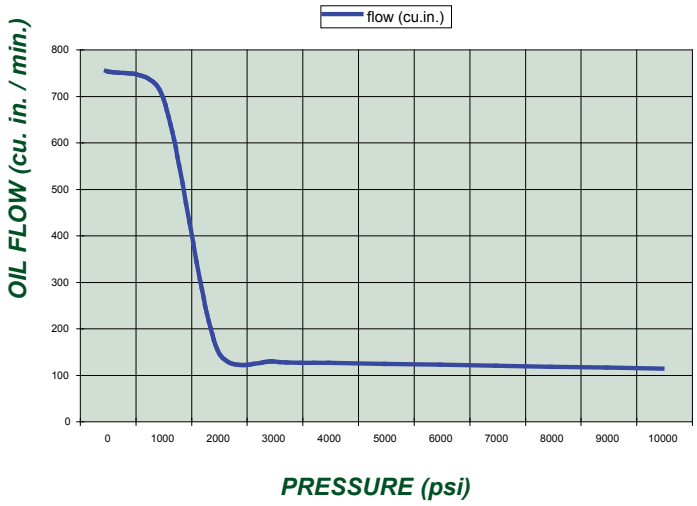

POWER PUMPS

50 SERIES GAS

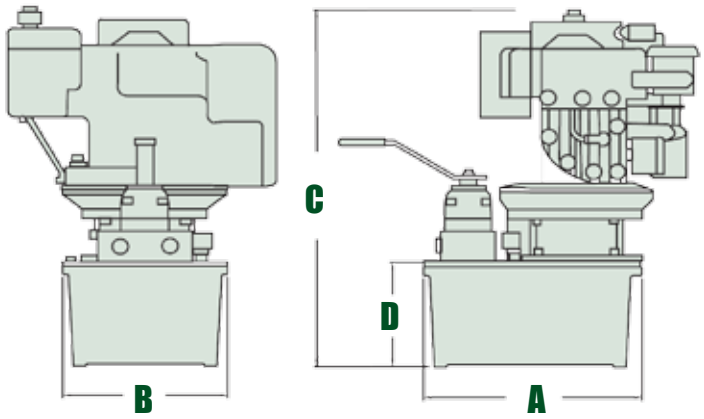

Model Shown
PGHM5132

Usable Reservoir Capacity	A	B	C	D
Gallons	(in)	(in)	(in)	(in)
2	12 1/4	12 1/4	22	6
5	19 5/8	12 1/4	24	8
10	19 5/8	12 1/4	28 1/2	12 1/2
20	19 5/8	23 1/2	28 1/2	12 1/2

Roll Bar Dimensions: 25 7/16" L x 20 1/2" H x 16 3/4" W

Product Ordering & Specifications

Model	Pressure Rating (psi)		Output Flow (cu.in./ min.)		Motor Spec	Valve Type	Reservoir Capacity	Weight (lbs)
	1st Stage	2nd Stage	1st Stage	2nd Stage	Honda			
PGHM5032	1,200	10,000	650	110	5 1/2 HP	3W, 3P	2	68
PGHM5035	1,200	10,000	650	110	5 1/2 HP	3W, 3P	5	123
PGHM5042	1,200	10,000	650	110	5 1/2 HP	4W, 3P	2	68
PGHM5045	1,200	10,000	650	110	5 1/2 HP	4W, 3P	5	123

Additional Pump Configurations

	MODEL	SELECTIONS
Class	P	Power Pump
Motor Controls	G	G = Gas Motor
Motor Type	H	H = 5 1/2 HP Honda® Motor
Valve Style	M	M = Manual
Pump Series	5	5 = 5 1/2 HP Gas Motor / 110 cu.in.
Factory Installed Options	1	0 = No Options 1 = Roll Bars Only 4 = Filter Only 5 = Roll Bars & Filter
Valve Type	3	2 = 2 Way 2 Position 3 = 3 Way 3 Position 4 = 4 Way 3 Position 5 = 3 Way Locking Style 6 = 4 Way Locking Style
Reservoir Size	2	2 = 2 Gallon 5 = 5 Gallon 6 = 10 Gallon 7 = 20 Gallon

ACCESSORY KITS

Model	Order #	Description

Order # G07-3M, G07-3S
G07-4M, G07-4S

3M = 3 WAY MANUAL
4M = 4 WAY MANUAL
3S = 3 WAY SOLENOID
4S = 4 WAY SOLENOID

Monitor pressure in the system by incorporating an Integrated Pressure Gauge.

INTEGRATED PRESSURE GAUGE KIT

Includes

* SHCS 3/8-16 X 2 1/2 4
GAUGE SHROUD MOUNTING 2
* GAUGE BRACKET MANUAL 1
* BHCS 10-24 X .50 316SS....4
MANIFOLD ASSEMBLY 1
* VALVE HANDLE ASSEMBLY....1
GAUGE SHROUD ASSEMBLY 1
INSTRUCTION SHEET 1

**** EXTRA COMPONENTS IN MANUAL 3 OR 4 WAY GAUGE KIT ****

Order # G02

Hands free pump control can be achieved with the 15 ft. cord Foot Switch.

FOOT SWITCH KIT

Includes

FOOT SWITCH 1
18-3 POWER CORD .... 15 FOOT CORD
SPADE TERMINAL 3
INSTRUCTION SHEET 1

Order # G03

Protect your G Series pump from jobsite mishaps with a lightweight industrial grade Roll Cage.

ROLL CAGE KIT

Includes

1/4 FENDER WASHER 4
HHCS 1/4-20 X .75 W/NYLON S.S 4
ROLL CAGE 1
INSTRUCTION SHEET 1

Order # G04 - 115
(FOR 115 VOLT)
G04 - 230
(FOR 230 VOLT)

Avoid pump overheating and costly repairs from long work periods with a coil induction Heat Exchanger.

HEAT EXCHANGER KIT - 115 VOLT / 230 VOLT

Includes

HEAT EXCHANGER ASSEMBLY G5 115V 1
BULKHEAD ELBOW 3/8" FLARE TUBE 2
SWIVEL FITTING 1
ELBOW 1/4" NPT TO 3/8" FLARE TUBE 1
TUBE HEAT EXCHANGER PUMP TO COVER PLATE 1
TUBE HEAT EXCHANGER COVER PLATE TO TANK 1
STANDOFF HEAT EXCHANGER 4
BHCS 1/4-20 X 3/8 4
HEX NUT 1/4-20 PLATD 4
O-RING 7/16 X 5/8 2
RING TERMINAL 1/4" 1
INSTRUCTION SHEET 1

Accessory Adaptable G Series Pumps

ACCESSORY KITS

Model	Order #	Description

Order # G05

Protect your system from unwanted contaminants with an easy to install External Filter Kit.

EXTERNAL FILTER KIT

Includes

FILTER BLOCK W/ RELIEF ASSEMBLY 1
ROLL PIN 1/8 X 3/8 LG 1
SHCS 3/8-16 X 5.25 1
SHCS 3/8-16 X 6.25 4
INSTRUCTION SHEET 4

Order # G01

Provide a safe distance from large loads with a handy 15 ft. heavy duty Pendant Control Kit.

PENDANT MOTOR CONTROL KIT

Includes

PENDANT ASSEMBLY 1
MEMBRANE SWITCH LABEL 3
DECAL PENDANT INSTRUCTION 1
SIMPLEX DECAL 1
INSTRUCTION SHEET GO1 1

Order # G06

Give your G Series pump mobility with heavy duty Swivel Casters for easier movement on tough terrain.

CASTER KIT

Includes

CASTER STRIP 2
SWIVEL CASTER 4
ACORN NUT 3/8-16 PLT 4
FHCS 1/4-20 X 3/4 LGL 4
INSTRUCTION SHEET GO6 1

Order # WMT4

Run up to 4 different tools to add versatility to your G Series pump with a MultiPort Adapter Kit.

FOR TORQUE WRENCH ONLY.

MULTI-PORT ADAPTER KIT

Includes

MULTI-PORT ADAPTER BLOCK 1
VALVE ADAPTER MULTIPORT ASSEMBLY 2
PIPE PLUG 1/8” FLUSH W/ COATING 4
SHCS 1/4-20 X 2” LG 2
HEX PIPE PLUG 1/4” W/ COATING 1
INSTRUCTION SHEET WMT4 1

Accessory Adaptable G Series Pumps

POWER PUMPS

Air Powered Hydraulic Foot Pumps

Engineers selected the Simplex air pump when reliable 10,000 psi power was needed to run this production line fixture. "The three position treadle is easy to use and the pump runs on standard shop air."

Air Foot Pump Family Shown

SIMPLEX ADVANTAGES

- ✔ *Powers a wide variety of single and double acting tools.*
- ✔ *Rugged all metal construction.*
- ✔ *High performance, reciprocating air motor for fast operation.*
- ✔ *Pressure relief valve protects hydraulic circuit.*
- ✔ *Quiet operation for in house production.*
- ✔ *3 position treadle for advance, hold and retract.*
- ✔ *Runs efficiently on standard shop air @ 10cfm, 90psi.*

GAUGES

Improve your system visibility and safety by adding an inline hydraulic gauge to your circuit.

- Pg. 81

COUPLERS

High flow quick disconnect couplers provide a quick change to a variety of pumps.

- Pg. 78-79

HOSES

Large selection of standard, heavy duty and thermo plastic hydraulic hoses to meet your requirements and safety factor. *- Pg. 82-83*

Performance Chart

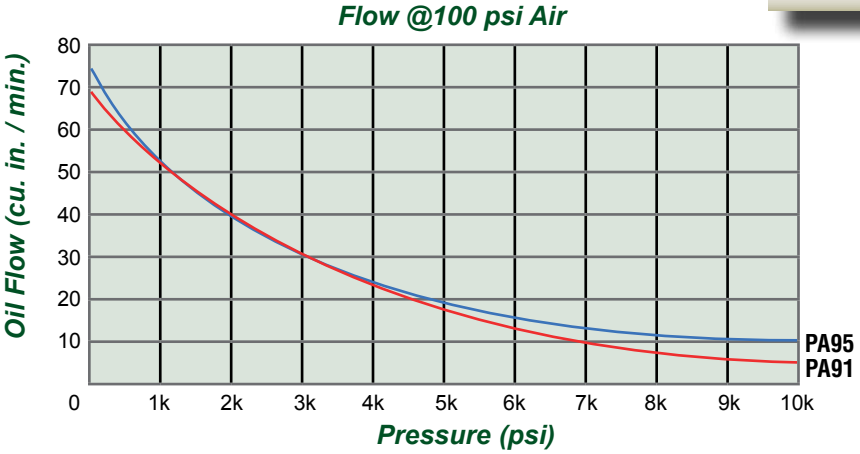

POWER PUMPS

Air Powered Hydraulic Foot Pumps

PA91-R
90 cu. in. Reservoir

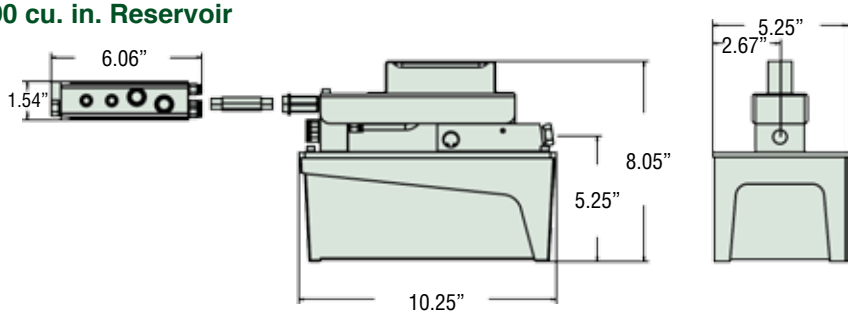

PA91-1 & PA95-1
230 cu. in. Reservoir

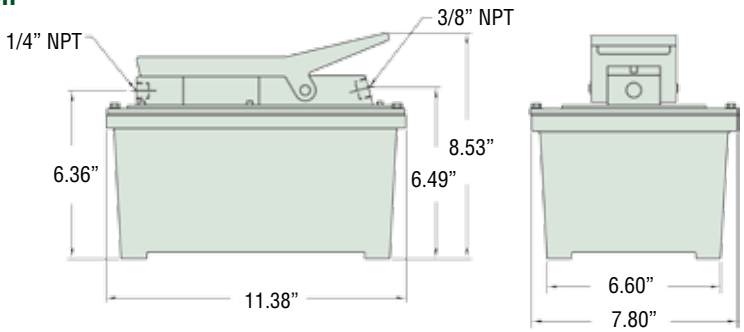

PA91 & PA95
90 cu. in. Reservoir

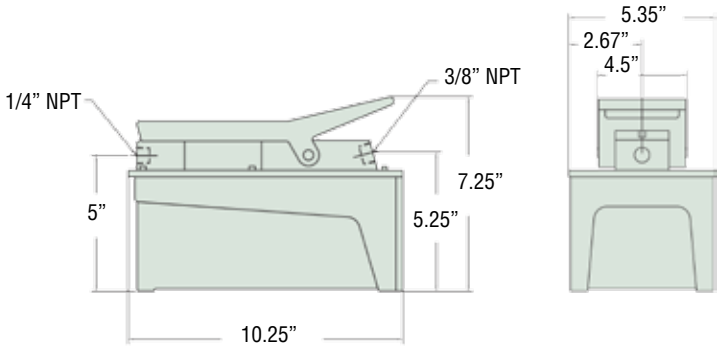

PA91D
90 cu. in. Reservoir

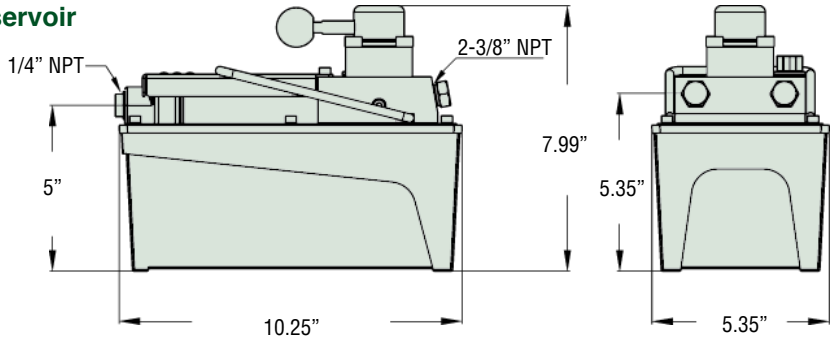

Product Ordering & Specifications

Model	Tool Type	Usable Oil Capacity (cu. in.)	Oil Flow @ 0 psi (cu. in.)	Oil Flow @ 10,000 psi (cu. in.)	Operating Air Pressure Range (psi)	Weight (lbs)
PA91	S/A	90	75	6	60 - 150	20
PA91-R	S/A	90	75	6	60 - 150	21
PA91-1	S/A	230	75	6	60 - 150	28
PA91-1R	S/A	230	75	6	60 - 150	29
PA91D	D/A	90	75	6	60 - 150	19
PA95	S/A	90	70	10	60 - 150	20
PA95-1	S/A	230	70	10	60 - 150	28